MP4-114FR

Flanged Rough-In Plate for 4" Fire Rated Models

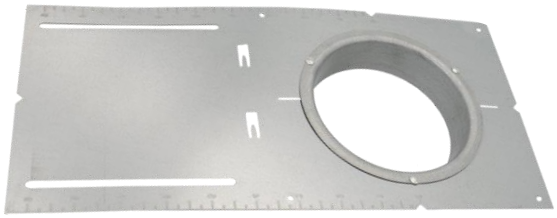

Project:

Location:

Quantity:

To be used with fixture model:

Notes:

DESCRIPTION

Rough-in plate with 1 1/4" flange for new construction pre-mounting of 4" fire rated models.

Hole diameter 4 3/8"

FEATURES

With 1 1/4" flange for protecting 2 sheets of 5/8" drywall when taking off the light fixture.

Made from galvanized steel.

Plate has alignment notches, slots and holes.

MOUNTING

Fix the plate with screws (not supplied) through the mounting slots.

COMPATIBLE FIXTURES

FR-LED-4-S9W-5CCT-FG
FR-LED-4-S12W-5CCT-PL
LFR-4R-FE-9W-5CCT
LFR-4R-RB-9W-5CCT
LFR-4S-FE-9W-5CCT
LFR-4S-RB-9W-5CCT

ORDERING GUIDE

model # **MP4-114FR**

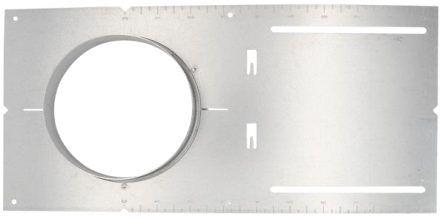

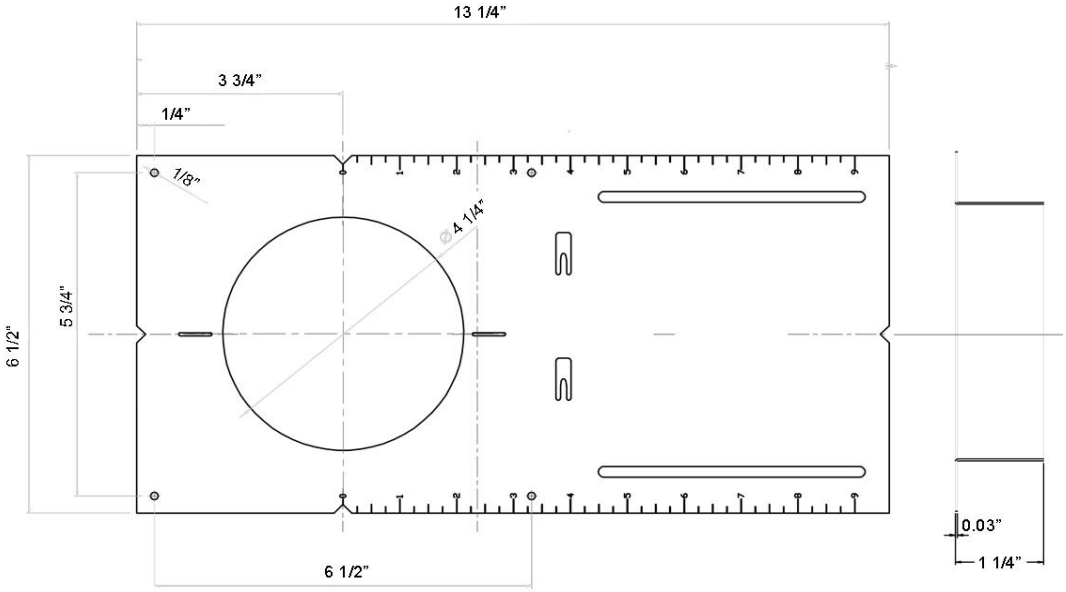

Lotus LED Lights USA
250 H Street # 301, Blaine WA 98230 tel 360-200-5500
Hainesport NJ, Naples FL, Vancouver WA

www.LotusLEDLights.com
mailing addresses
warehouses

Lotus LED Lights CANADA
1080 Cliveden Ave # 6, Delta BC V3M 6G6 tel 604-538-3090
Delta BC & Mississauga ON